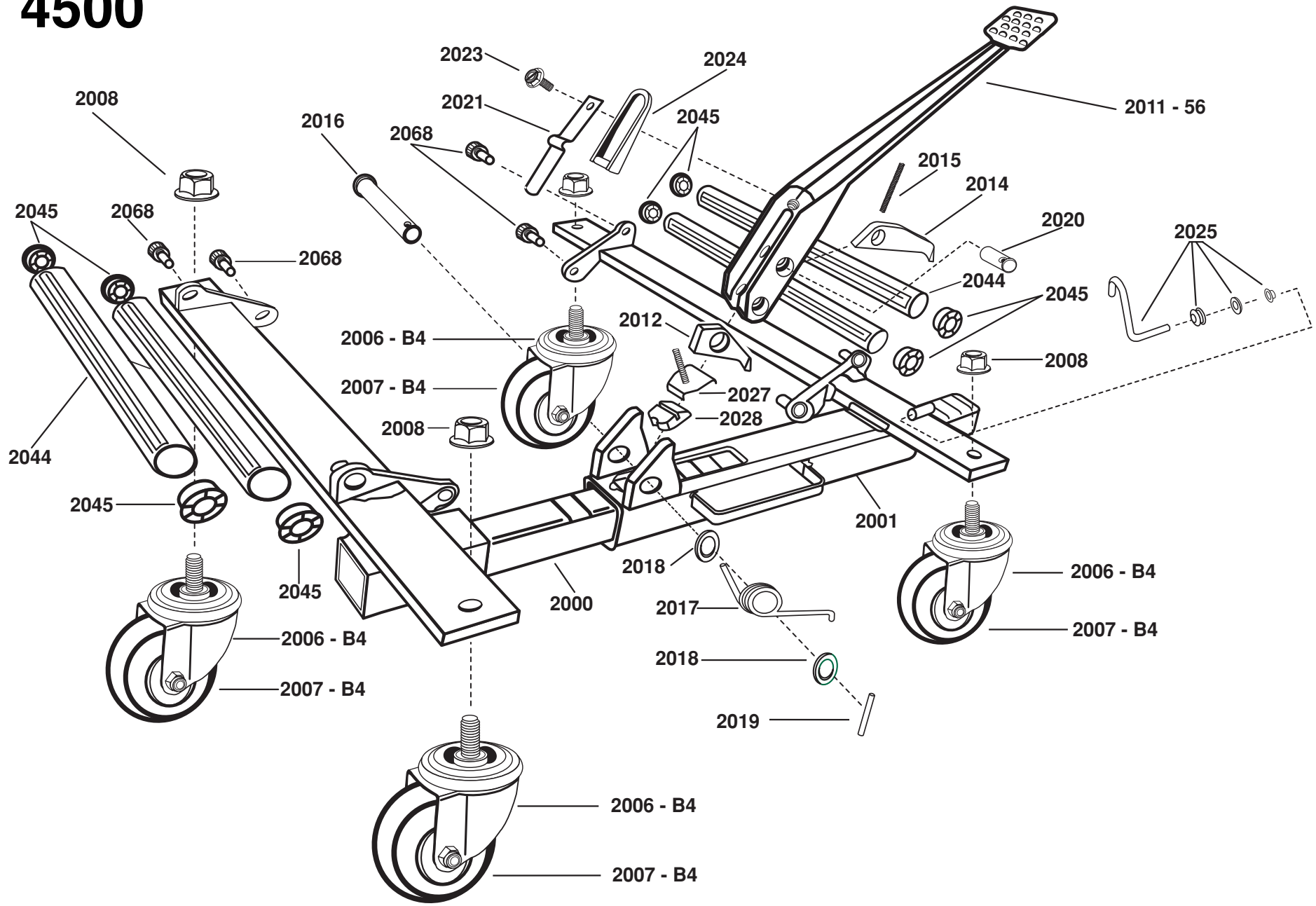GOJAK
MODEL
4500